LAWRENCE COOPER
Mechanical Engineering Technician
3D CAD Modeling Design & Drafting

Telephone - (03) 981 3029
Mobile - 022 3811 031

cooper.lawrence.jo@gmail.com

Gear Basics Part 2

We will start off this second gear design tutorial by looking at a few design factors we need to consider when designing a serviceable gear train.

1. *Suitable gear ratio – for simple spur and helical gears the maximum ratio we should design for our gear set is 10 : 1, often in practice this is kept to around 3 : 1. The reasons for this is due to gears being used to change a lower RPM into a higher RPM, they are also used to change a lower torque to a higher torque . in the torque case with a 10 : 1 ratio, a tooth on the higher torque gear has to handle a loading 10 times more than the lower torque gear. Designing our gears for strength is easier at ratio's less than 10 : 1, and simpler at a 3 : 1 ratio. Compound gear trains and other gearing systems come into use when larger ratio's are required. In these tutorials we are only looking at simple gear trains.*

2. *As with many mechanical components we design, we take the actual loads involved and apply a "service factor". We multiply the load applied by a factor to compensate for any variation caused by the nature of the driven machine and the driving machine. The following table taken from AS 2938 shows typical service factors to use in some cases.*

PRIME MOVER	UNIFORM	MODERATE	HEAVY SHOCK
Electric Motor < 150% FLT during starting	1.00	1.25	1.75
Electric Motor – squirrel cage DOL	1.20	1.40	1.95
Multi-cylinder internal combustion engine	1.25	1.50	2.00
Single-cylinder internal combustion engine	1.50	1.75	1.25

3. *Material – sometimes the pinion being the smaller component is made from a higher grade of material than the gear, though often as it is more convenient we make the pinion and gear from the same material. When using higher grades of steel we will cut the gear in the annealed condition then harden and temper to achieve the required strength and hardness. Gears that have been hardened need often to be ground afterwards with an allowance on the teeth and bore for this process. A protuberance is required so that the tooth can be correctly ground (see diagram 1).*

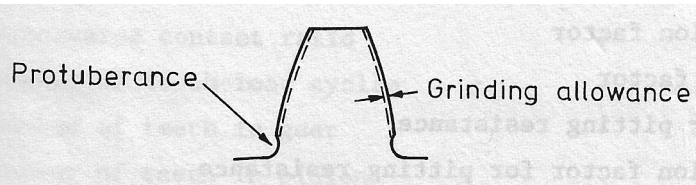

Diagram 1

A quick review of formula from Gear Basics Part 1.

$M = \frac{D}{N}$ *where M = the gear module, D = operating pitch diameter of the gear, N = the number of teeth the gear has.*

D (pitch dia. gear) = N(no. of teeth gear) x M (tooth module) – this is for the driven gear

d (pitch dia. Pinion) = n (no. of teeth pinion) x M (tooth module) – for the pinion gear we use the same basic formula but change to lower case to indicate this is pinion calculation

$Center\ Dist = \frac{(D+d)}{2}$ *calculate center distance between gears*

We will now add formula used to calculate blank diameter required to cut gear from

B_{dia} *(blank diameter gear) = (N + 2) x M and for pinion basically the same but lower case*

b_{dia} *(blank diameter pinion) = (n + 2) x M*

<u>Example</u>

Gear

B_{dia} *= (N + 2)x M*

= (33 + 2) x 3

= 105mm

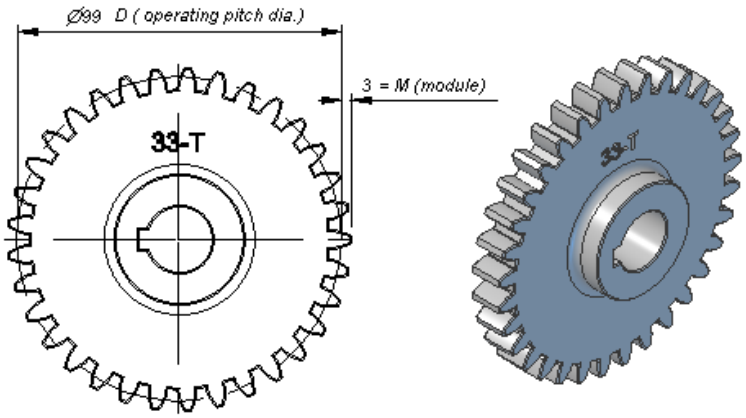

Pinion

b_{dia} *= (n + 2) x M*

= (17 + 2) x 3

= 57mm

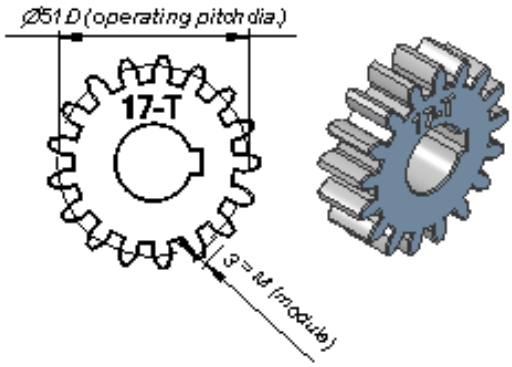

<u>Factors to Consider for Pinion Design</u>

As previously mentioned in Gear Basics Part 1, with a 20 deg pressure angle undercutting will occur if the pinion has less than 17 teeth. Undercutting reduces the strength of the pinion teeth and the teeth mating will be poorer. For good proportions we make the gear face width between 8 and 12 times the tooth module. The pinion face width is normally about wider than the gear by between 4mm to 10mm depending on its size, being mainly for appearance and to give a wider tolerance for assembly, the gear should always have full face contact.