REVISIONS				
ZONE	REV.	DESCRIPTION	DATE	APPROVED
	A	RELEASED TO PRODUCTION	11/17/2013	TND

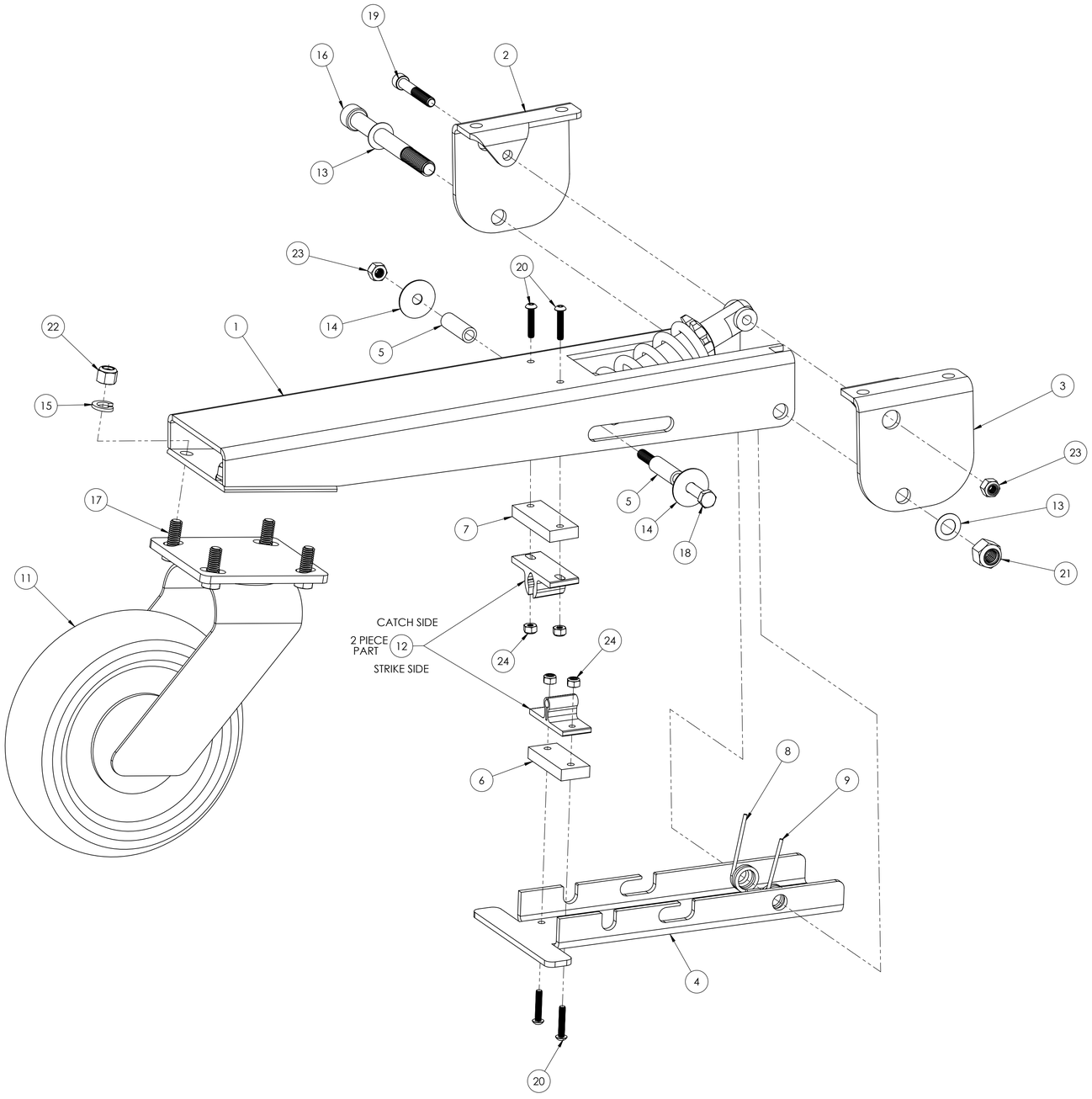

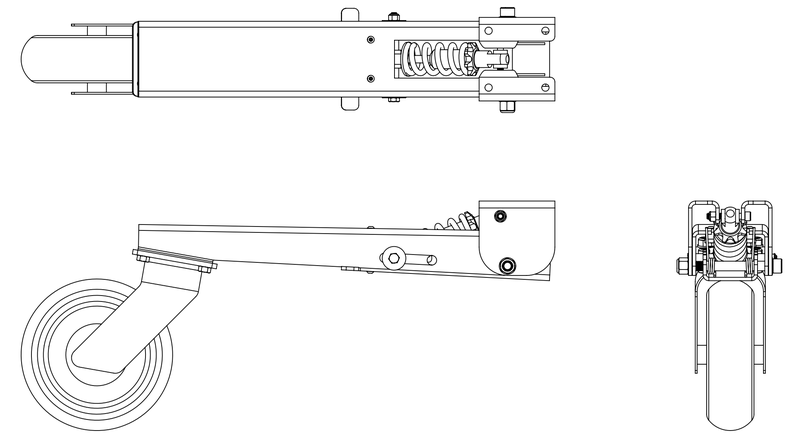

ITEM NO.	PART NUMBER	DESCRIPTION	QTY
1	13027	LEG WELDMENT, STINGER WHEEL	1
2	13026R	MOUNTING BRACKET RIGHT, STINGER WHEEL	1
3	13026L	MOUNTING BRACKET LEFT, STINGER WHEEL	1
4	13030	LOCKING BRACKET, STINGER WHEEL	1
5	13033	SLIDE SPACER, STINGER WHEEL	2
6	13031	STRIKER SPACER, HAND TRUCK	1
7	13032	CATCH SPACER, HAND TRUCK	1
8	13034	RIGHT TORSION SPRING MODIFICATION, STINGER WHEEL	1
9	13035	LEFT TORSION SPRING MODIFICATION, STINGER WHEEL	1
10	LJ400B	SHOCK ABSORBER 750 LBS/IN; 6" CENTER DIST.	1
11	10864-P	10" CASTER, PNEUMATIC	1
12	1739A22	SNAP GRAB CATCH	1
13	95229A540	FLAT WASHER 1/2"	2
14	91090A111	WIDE FLAT WASHER 5/16"	2
15	91102A760	SPLIT LOCKWASHER 3/8"	4
16	90128A735	SHC SCREW 1/2-13 X 5" LG.	1
17	90201A314	HEX SHC SCREW 3/8-16 X 1" LG.	4
18	91257A600	HEX HC SCREW 5/16-18 X 4.5" LG.	1
19	91251A591	SHC SCREW 5/16-18 X 2" LG.	1
20	91255A273	BUTTON SHC SCREW 10-32 X 1" LG.	4
21	91257A600	HEX NYLOCK NUT 1/2-13	1
22	90640A131	NYLOCK NUT 3/8-16	4
23	90640A130	HEX NYLOCK NUT 5/16-18	2
24	90631A411	NYLOCK NUT 10-32	4

TOLERANCE/FINISH
UNLESS OTHERWISE SPECIFIED

INCHES[MM]		125 √RMS	[RA3.2um]
.X	.XX	.XXX	ANGLES
.020 [0.51]	±.010 [0.25]	±.005 [0.13]	±1°

GENERAL NOTES
ALL THREADS CLASS 2 [6G] FIT
BREAK ALL EDGES .01/.02 [.25/.50] X 45°
SURFACE TEXTURE TO BE IN ACCORDANCE WITH ANSI B46.1
DIMENSIONING AND TOLERANCING TO BE IN ACCORDANCE WITH ANSI Y14.5
DRAWING VIEW STANDARDS TO BE IN ACCORDANCE WITH ANSI Y14.5

Novative Design, INC.
PO Box 310, Doylestown PA 18901
(P) 215-794-3380

THIS DOCUMENT, THE PROPERTY OF NDI, IS LOANED SUBJECT TO RETURN UPON DEMAND, AND INCLUDES CONFIDENTIAL & PROPRIETARY INFORMATION WHICH MAY NOT BE DISCLOSED TO ANY THIRD PARTY OR USED FOR ANY PURPOSE CONTRARY TO IT'S INTENDED USE WITHOUT THE EXPRESSED WRITTEN CONSENT OF NDI.

THIRD ANGLE PROJECTION

TITLE
STINGER WHEEL ASSEMBLY

TND	11/17/2013	USED ON
DB	11/17/2013	

SIZE	DRAWING NUMBER	REV
D	13025	A

SCALE 1:2 SHEET 1 OF 1